NVP exhibits
www.nvp.com.au

20′ Vertical Curve - 04

Total Graphic Area: 236″w X 98.5″h
Graphic Area, Half Size: 118″w X 49.25″h
Total Visual Area: 232″w X 94.5″h
Visual Area, Half Size: 116″w X 47.25″h

Please be sure to include the 2″ bleed around the perimeter to compensate for the finishing of the graphics. Do not design any critical elements (text, logos, etc.) within 2″ of the edge (see dotted lines).

Use separate template for shelf graphic panels. It only represents placement on this template.

Please consider obstructions such as shelf unit & header etc. when laying out your graphics.

The shelf unit can be mounted on the left or right side of the frame.

General Artwork Guidelines
- cmyk color mode
- do not embed images, supply them
- resolution must be 100-120 ppi
- all fonts must be created to outlines

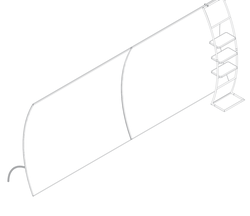

NVP exhibits
www.nvp.com.au

ACCENT 02

Graphics:
Total Graphic Area: 22"w X 18.5"h
Total Visual Area: 21"w X 17.5"h

Use separate template for formulate graphic. This template only represents the graphic panels on the top and bottom of the shelf.

Please be sure to include the 1/2" bleed around the perimeter to compensate for the finishing of the rigid sintra graphics.
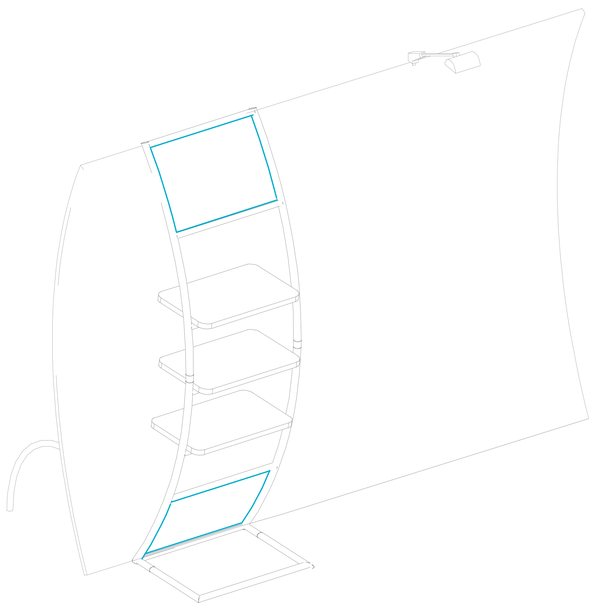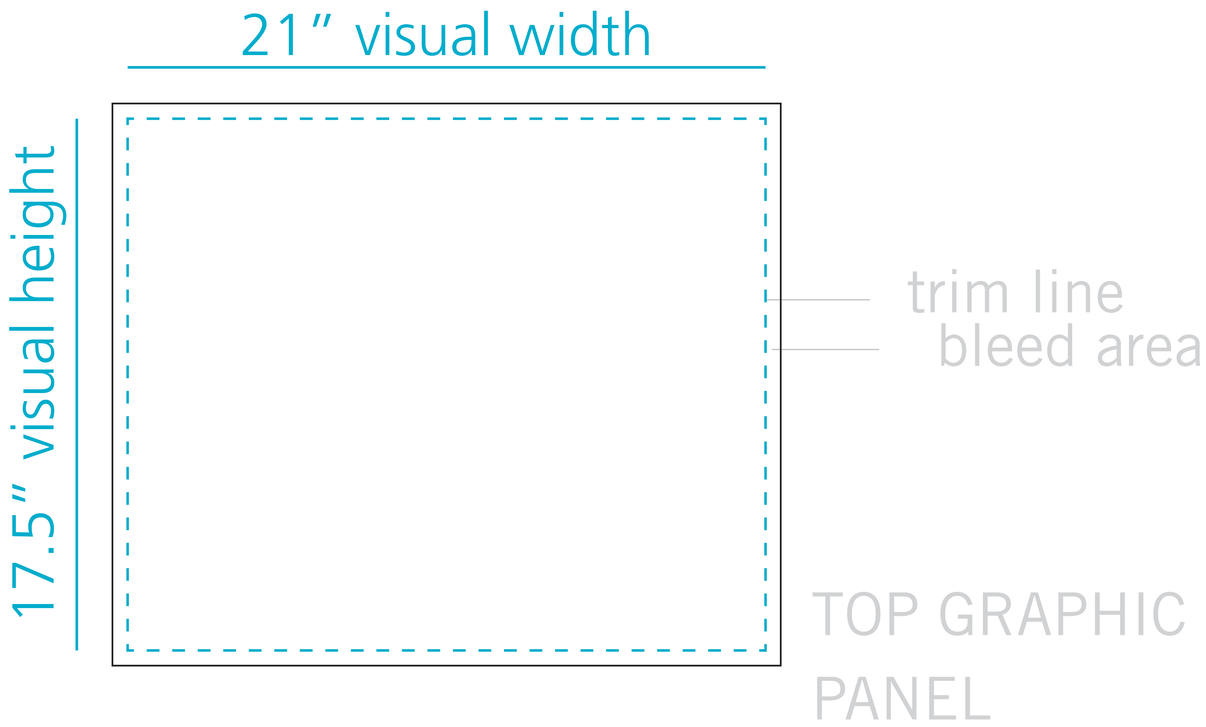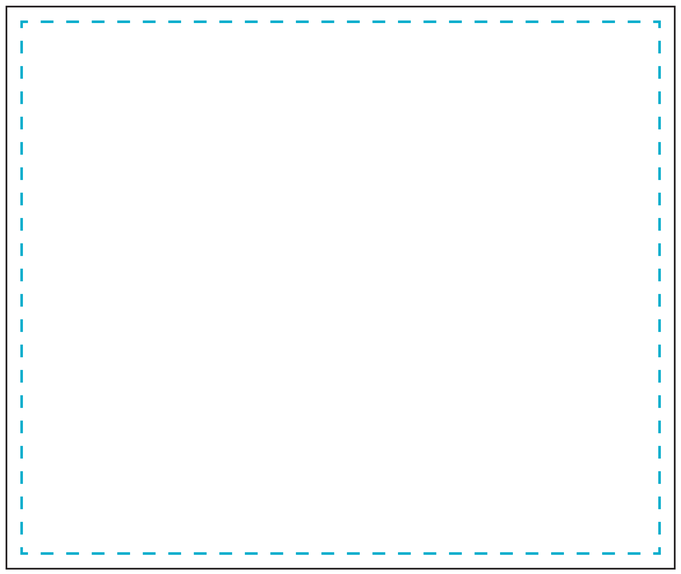
General Artwork Guidelines
- cmyk color mode
- do not embed images, supply them
- resolution must be 100-120 ppi
- all fonts must be created to outlines