NVP exhibits
www.nvp.com.au

S7, Straight Wall

Total Graphic Area: 118”w X 96”h
Total Visual Area: 114”w X 92”h

Please be sure to include the 2” bleed around the perimeter (note trim & stitch locations on template). Do not design any critical elements (text, logos, etc.) within 2” of the edge.

Use separate template for pillowcase graphic. It only represents placement on this template.

Please consider obstructions such as shelf unit when laying out your graphics.

The pillowcase unit can be mounted on the left or right side of the frame.

General Artwork Guidelines
- cmyk color mode
- do not embed images, supply them
- resolution must be 100-120 ppi
- all fonts must be created to outlines

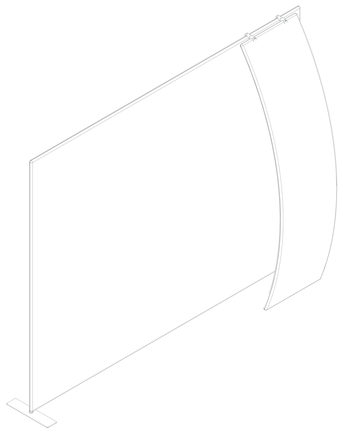

NVP exhibits
www.nvp.com.au

Total Graphic Area: 118”w X 96”h
Total Visual Area: 114”w X 92”h

Please be sure to include the 2” bleed around the perimeter (note trim & stitch locations on template). Do not design any critical elements (text, logos, etc.) within 2” of the edge.

Header:
Total graphic area: 48.25”w X 12.8125”h
Total visual area: 47.25”w X 11.8125”h

Use separate template for header panel. It only represents placement on this template.

Please be sure to include the 1/2” bleed around the perimeter to compensate for the finishing of the rigid sintra graphics.

Use separate template for ladder graphic panels. They only represent placement on this template.

Please consider obstructions such as shelf unit & header etc. when laying out your graphics.

The shelf unit & header can be mounted on the left or right side of the frame.

General Artwork Guidelines
- cmyk color mode
- do not embed images, supply them
- resolution must be 100-120 ppi
- all fonts must be created to outlines

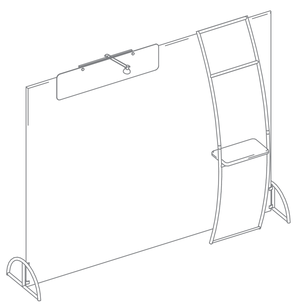

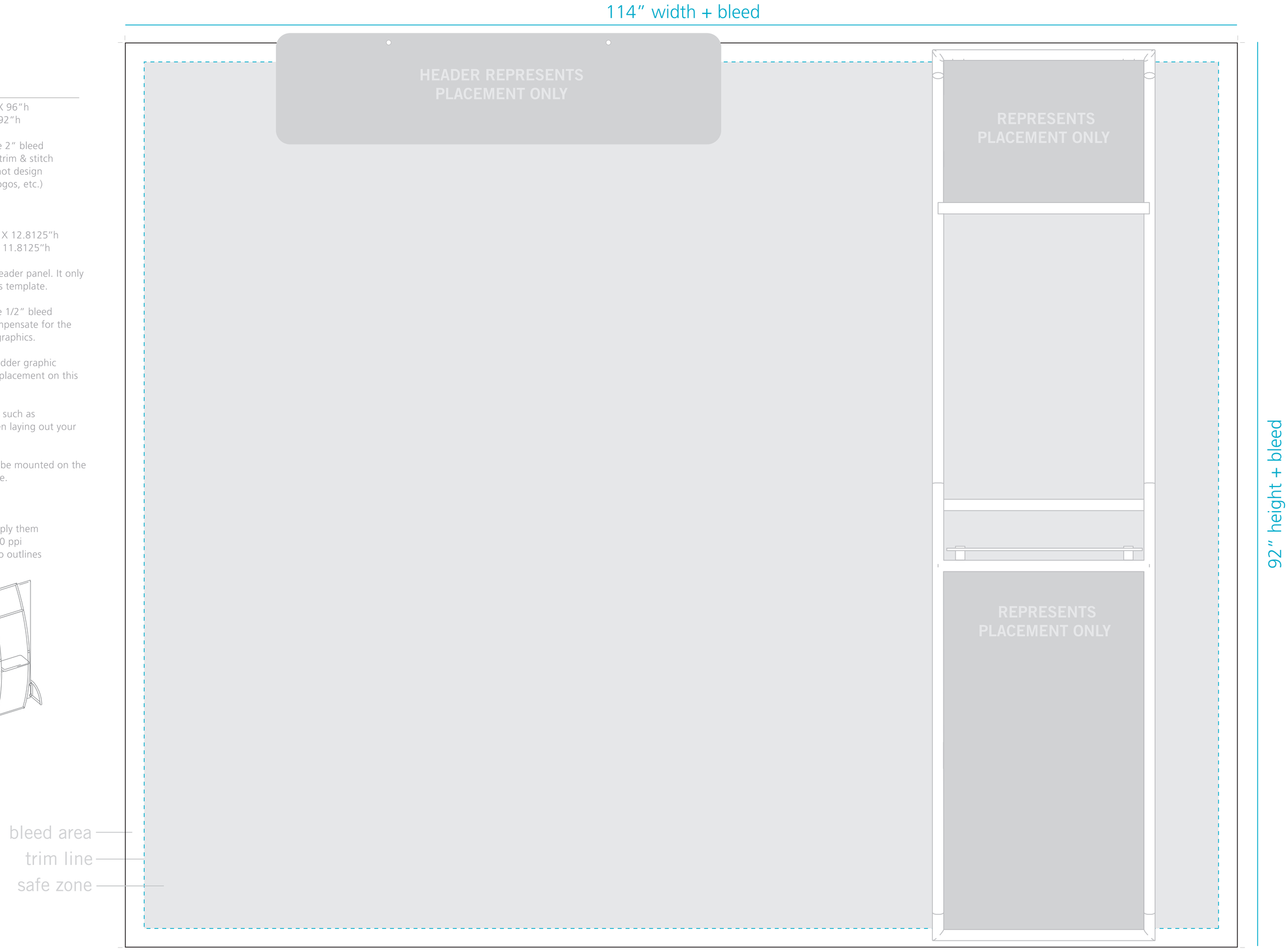

NVP exhibits
www.nvp.com.au

Shelf Ladder Graphics

Top Graphic:
Total graphic area: 22"w X 18.5"h
Total visual area: 21"w X 17.5"h

Bottom Graphic:
Total graphic area: 22"w X 39.6875"h
Total visual area: 21"w X 38.6875"h

Use separate template for formulate graphic.
This template only represents the graphic panels on the literature rack ladder.

Please be sure to include the 1/2" bleed around the perimeter to compensate for the finishing of the rigid sintra graphics.

General Artwork Guidelines
- cmyk color mode
- do not embed images, supply them
- resolution must be 100-120 ppi
- all fonts must be created to outlines

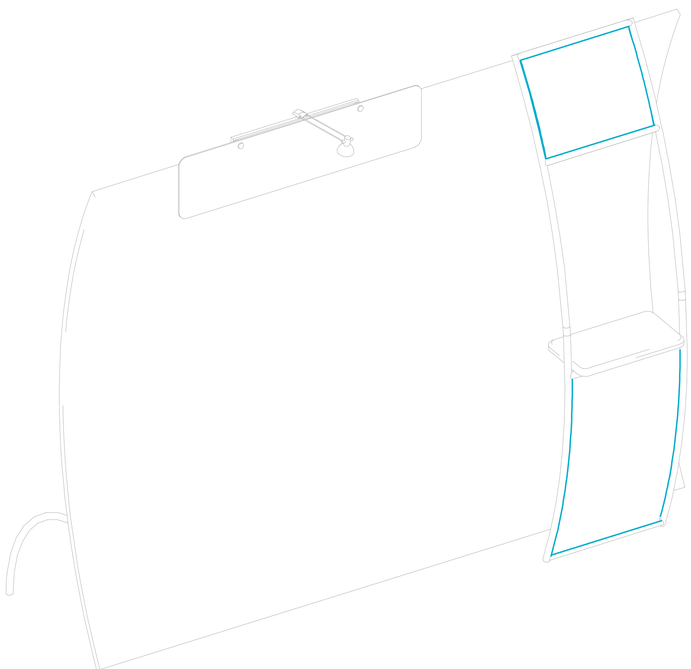

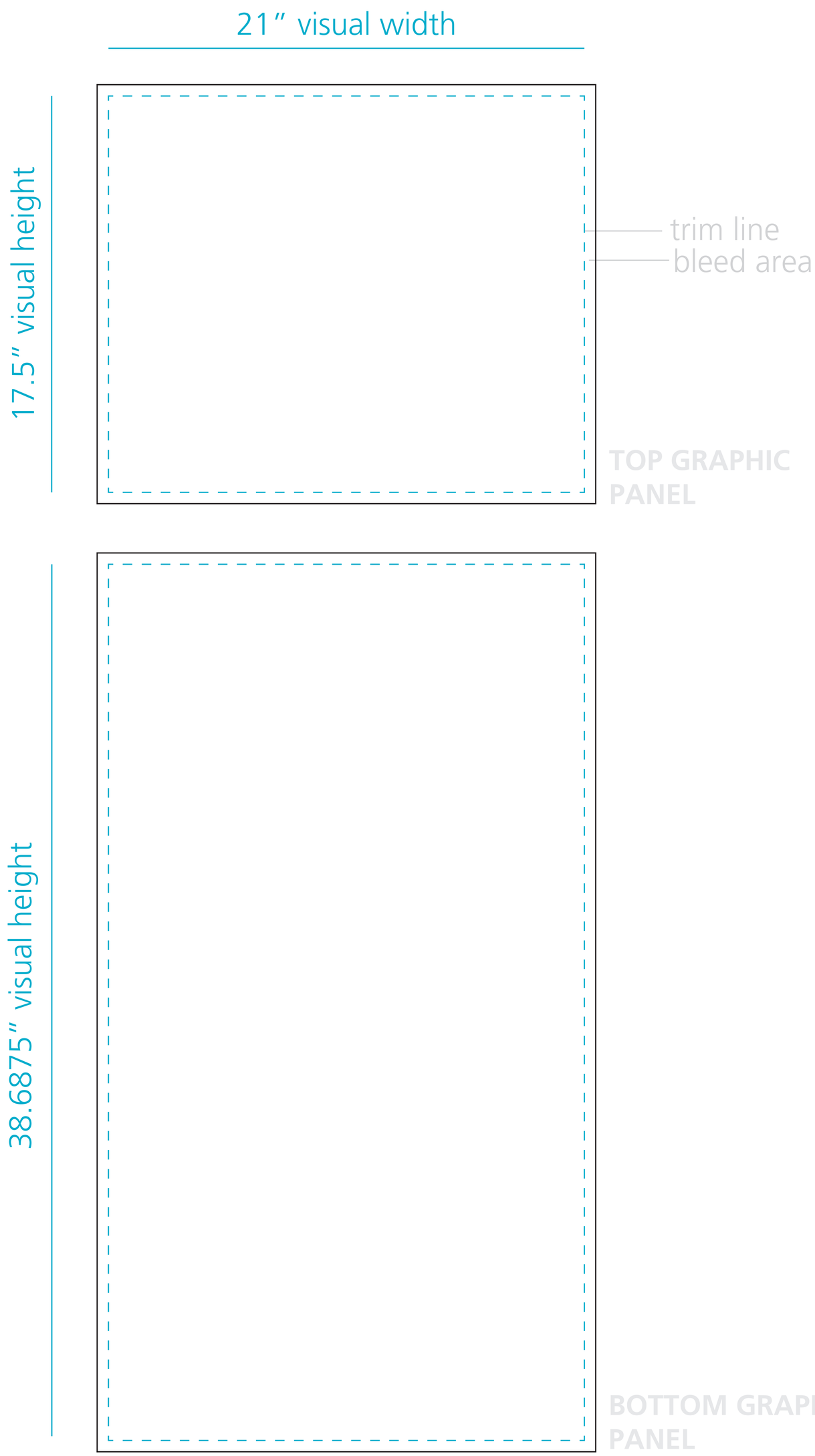

NVP exhibits

www.nvp.com.au

ACCENT 01

Total graphic area: 27.6”w X 101”h
Total visual area: 23.6”w X 97”h

Use separate template for formulate graphic. This template only represents the graphic panel for the pillowcase fabric.

Please be sure to include the 2” bleed around the perimeter to compensate for the finishing of the fabric graphic.

General Artwork Guidelines
- cmyk color mode
- do not embed images, supply them
- resolution must be 100-120 ppi
- all fonts must be created to outlines

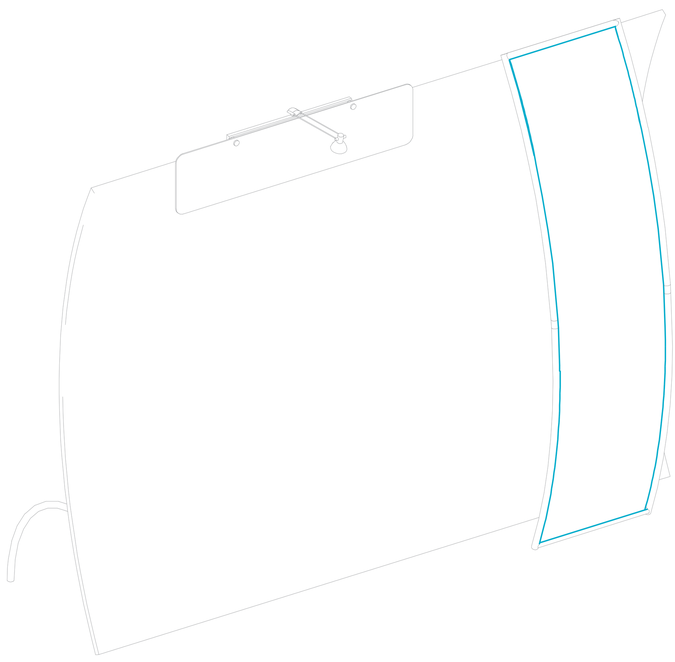

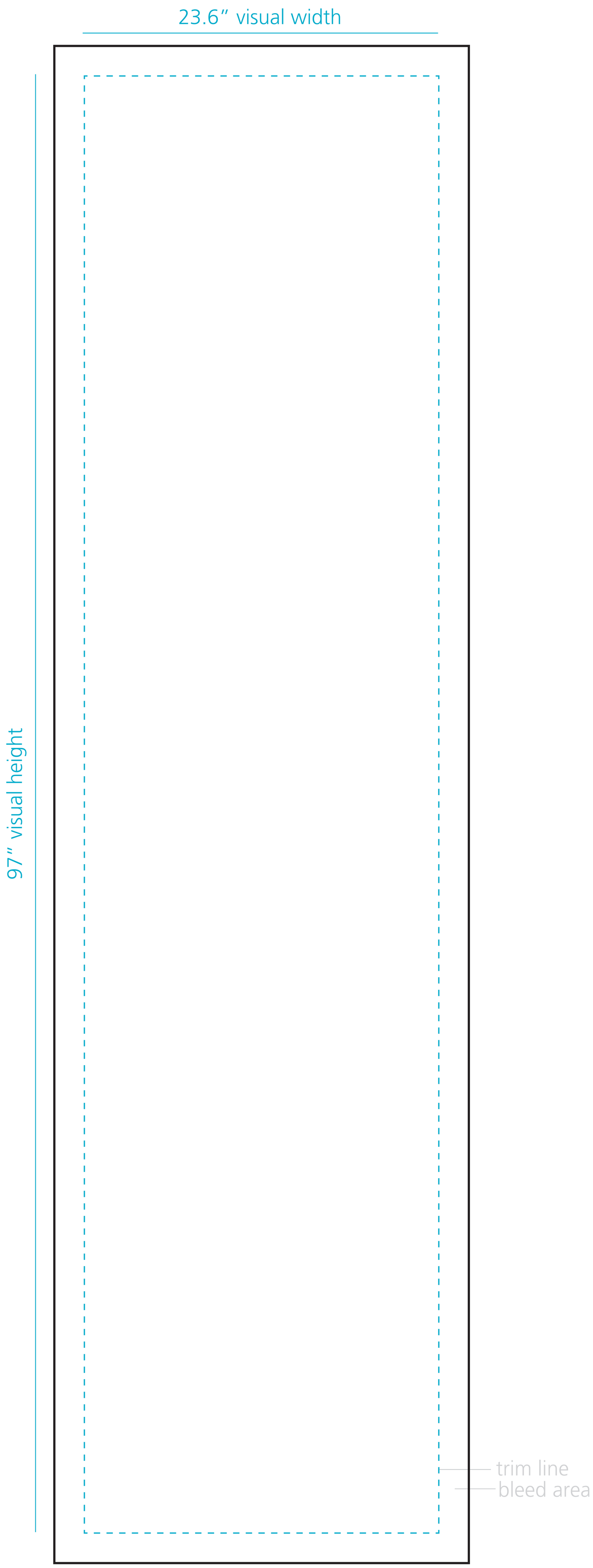

NVP exhibits
www.nvp.com.au

Header:
Total Graphic Area: 48.25”w X 12.8125”h
Total Visual Area: 47.25”w X 11.8125”h

Use separate template for wave graphic. This template only represents the header panels.

Please be sure to include the 1/2“ bleed around the perimeter to compensate for the finishing of the rigid sintra graphics.
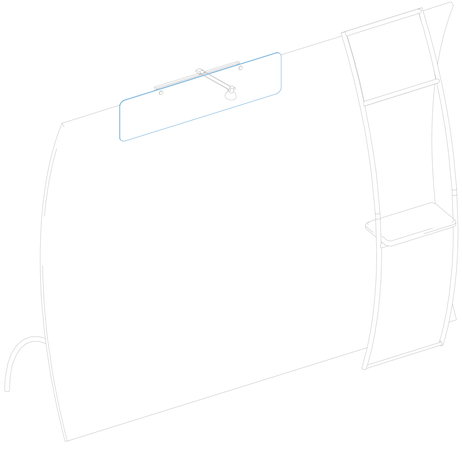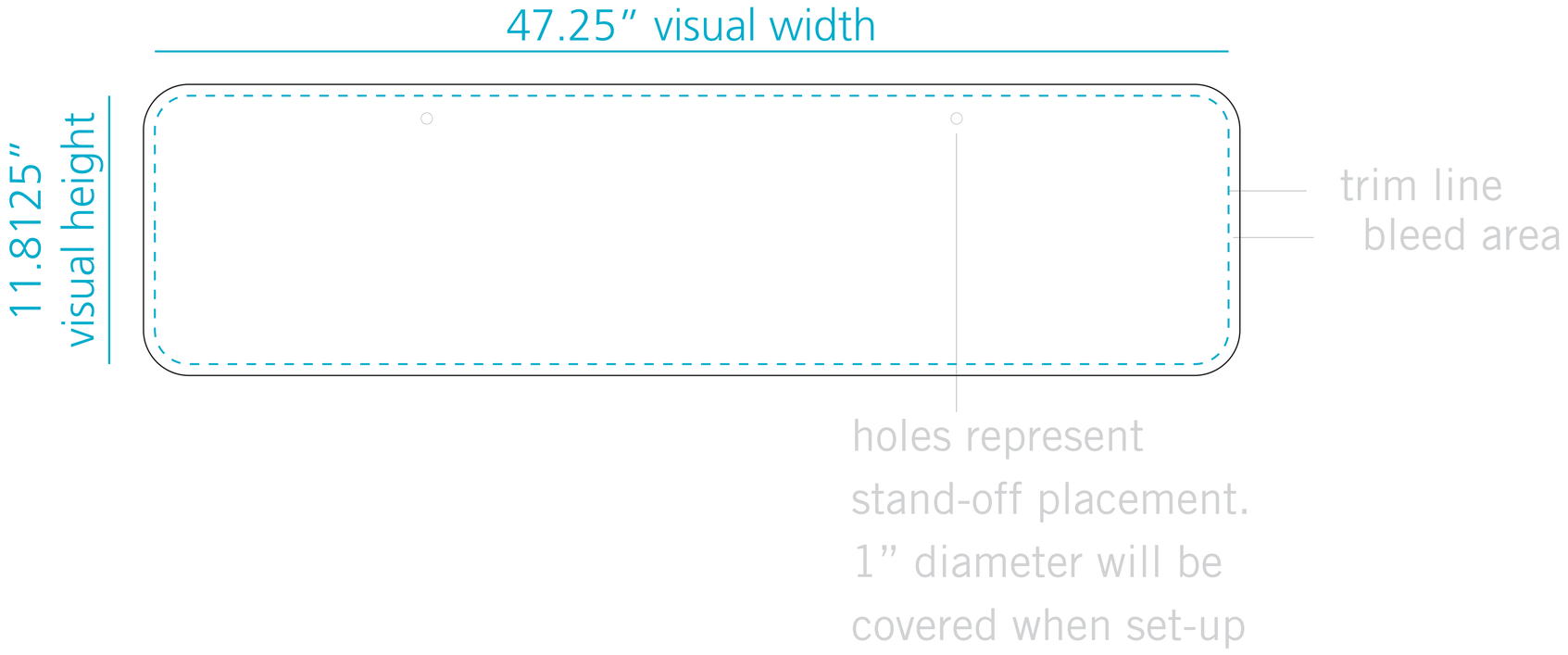
General Artwork Guidelines
- cmyk color mode
- do not embed images, supply them
- resolution must be 100-120 ppi
- all fonts must be created to outlines